


# THE FUTURE OF DRILLING

Digga's series of high-powered compact planetary drives form a comprehensive portfolio for the foundation boring, post hole drilling, screw piling and utility markets. Digga auger drives are manufactured right here in Australia, specifically for the diverse world-wide landscape.

The **PD *(Premium Drive)*** range of drilling drives has been the workhorse of the industry, featuring innovative designs and advanced features that keep it ahead of the game. With unique, ground-breaking advancements like the Digga Bell motor—engineered specifically for our attachments and utilizing Geroler technology by Danfoss, these drives deliver unmatched performance, efficiency, and reliability, setting the standard for drilling solutions worldwide.

HALO
AVAILABLE ON THESE DRIVES

## INDUSTRY LEADING PERFORMANCE

By utilising the Danfoss Bell motor, the auger drive will accept 25kW of power, with a max pressure of 240bar (at 30lpm), delivering exceptional power-to-speed ratio when coupled with the industry leading Digga planetary gearbox.



## ADVANCED TWO-PIECE SHAFT DESIGN

Digga's gearbox features a two-piece shaft design that isolates the shaft from the planetary carrier, protecting internal gears from pushing, pulling, and side loading forces generated by the host machine. Supported by oversized double tapered bearings, it efficiently handles axial and side loads. The shaft is backed by a lifetime pull-out warranty.

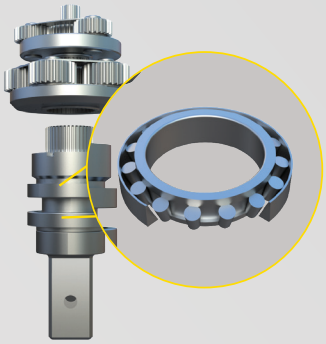

## BUILT TOUGH

Digga gearboxes are built tough with a reputation for quality, dependability and over four decades of trusted performance. Our gearboxes are made from precision machined gears using high grade alloy steel, compact design with exceptional power to weight ratio that delivers outstanding performance, reliability and great return on investment.

## AUSTRALIAN QUALITY

The gearbox comes with the added peace of mind knowing they have the highest shaft pull out rating in the industry, with heavy duty, custom designed Digga manufactured lock nut.

More Info

# LARGE BACKHOES & EXCAVATORS UP TO 10T

DIGGA

**REPUTATION:** A legacy of unwavering quality and reliability.
**PERFORMANCE:** Exceptional Power to Weight Ratio.
**EFFICIENCY:** Fewer moving parts, increased efficiency.
**2 PIECE SHAFT:** Lifetime warranty on shaft pull.
**AUSTRALIAN-MADE QUALITY:** Since 1981




| MODEL | PD4HF | PD6HF | PD8HF | PD10HF |
|---|---|---|---|---|
| Max Torque (Nm) @ 240 bar** | 4,496 | 5,649 | 7,147 | 9,716 |
| Recommended Flow (lpm)** | 70-150 | 70-150 | 80-200 | 100-200 |
| Motor Type | Danfoss 6K Bell | | | |
| Max Pressure - Do not exceed** | 240 bar @ 125 lpm | | | |
| Max Flow - Do not exceed** | 170 lpm @ 176 bar | 210 lpm @ 143 bar | 230 lpm @ 130 bar | |
| Max Continuous Power** | 50 kW (67 hp) | | | |
| Pressure Relief Valve | INCLUDED | | | |
| Energy Control Valve | OPTIONAL | | | |
| Case Drain Required | NOT REQUIRED | | | |
| Standard Output Shaft | 75mm Sq | 75mm Sq | 75mm Sq | 75mm Sq |
| Weight (kg) | 125 | 149 | 149 | 149 |
| Overall Length (mm) | 950 | 950 | 950 | 950 |
| Diameter (mm) | 290 | 290 | 290 | 290 |
| HALO Available | Optional | | | |
| Recommended Auger | 6 Series | 6 Series | 8 Series | 8 Series |
| Max Auger Diameter Fracturable Rock* | 750 | 900 | 1,000 | 1,000 |
| Max Auger Diameter Clay/shale (mm)* | 750 | 900 | 1,000 | 1,000 |
| Max Auger Diameter Earth (mm)* | 1,000 | 1,200 | 1,200 | 1,500 |

## OUTPUT SPEED (RPM)

| PD4HF | | PD6HF | | PD8HF | | PD10HF | |
|---|---|---|---|---|---|---|---|
| LPM | RPM | LPM | RPM | LPM | RPM | LPM | RPM |
| 50 | 43 | 60 | 41 | 80 | 43 | 100 | 39 |
| 70 | 60 | 80 | 54 | 100 | 54 | 120 | 47 |
| 90 | 77 | 100 | 68 | 120 | 64 | 140 | 55 |
| 110 | 94 | 120 | 81 | 140 | 75 | 160 | 63 |
| 130 | 111 | 140 | 95 | 160 | 86 | 180 | 71 |
| 150 | 128 | 150 | 102 | 180 | 96 | 200 | 79 |
| | | | | 200 | 107 | | |

## OUTPUT TORQUE (NM)

| PD4HF | | PD6HF | | PD8HF | | PD10HF | |
|---|---|---|---|---|---|---|---|
| BAR | NM | BAR | NM | BAR | NM | BAR | NM |
| 120 | 2,236 | 120 | 2,809 | 120 | 3,554 | 120 | 4,831 |
| 140 | 2,608 | 140 | 3,277 | 140 | 4,146 | 140 | 5,637 |
| 160 | 2,981 | 160 | 3,745 | 160 | 4,739 | 160 | 6,442 |
| 180 | 3,354 | 180 | 4,213 | 180 | 5,331 | 180 | 7,247 |
| 200 | 3,726 | 200 | 4,682 | 200 | 5,924 | 200 | 8,052 |
| 220 | 4,099 | 220 | 5,150 | 220 | 6,516 | 220 | 8,857 |
| 240 | 4,496 | 240 | 5,649 | 240 | 7,147 | 240 | 9,716 |

Output speed and torque specifications are THEORETICAL. Speed and torque output are dependent on the overall system efficiencies associated with the prime movers hydraulic system.
This document should be used for information and comparative purposes only. When determining criteria, & application specific information is required, please contact DIGGA.

v1.01