ROCK BUCKET

Rock Bucket

The rock bucket is used for fast clean-up, ground levelling, sifting out debris & rocks, and gathering material away from buildings and obstructions.

Operators now wishing to minimise waste on site will find that the use of this type of bucket means that material can be sifted and sorted to clear out unwanted debris and leave good soil or material behind.

Features:

- 4 Bucket widths available - from 1740mm (68”) to 2222mm (87”)
- 52mm (2”) Tine spacing
- Digga’s rock bucket is designed to offer maximum production and cover the wheel bases of skid-steer loaders and tractors.
- Available with or without single piece construction universal skid-steer mounting
- 1045 Steer bar, high grade steel
- Larger sizes available on request

GRAPPLE ALSO AVAILABLE

Ideal Use:

Clearing construction sites, sifting debris and much more.

Machine Suitability:

Skid steer loaders and Tractors.

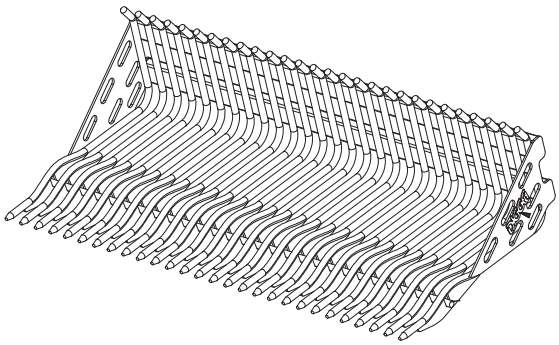

MINI ROCK BUCKET ALSO AVAILABLE

Specifications	1740mm	1900mm	2060mm	2222mm
Weight: (with multifit frame)	299kg	324kg	348kg	372kg
Length (O.A.L)	1079mm	1079mm	1079mm	1079mm
Height (overall)	537mm	537mm	537mm	537mm
Width (overall)	1740mm	1900mm	2060mm	2222mm
Tine spacing (between Tynes)	52mm	52mm	52mm	52mm
Number of Tynes	22	24	26	28

v1.01